

Pendant lamp Trio Select Aurum beige 48W 5700lm IP20 2300K, 3000K, 4000K 3CCT

Product code 24095

Correlated colour temperature	3CCT 2300K, 3000K, 4000K
Luminous flux	5700lumens
Luminaire’s efficiency	119lm/W
Brand	Trio Select
Output	48W
Maximum output	48W
Protection class	IP20
Length	630.0mm
Width	1000.0mm
Height	2000.0mm
Casing colour	beige
Casing material	metal
Work environment	indoor use

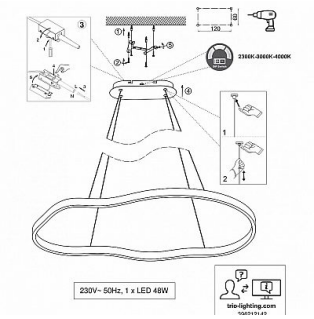



© LED House OÜ, tel: (+372) 56 202 303
Kadaka street 3/3, Tallinn 10621, Estonia, info@ledhouse.ee