KARIZMA luce



Recessed light Karizma Luce Dea Carmenta M white / black 14W 1120lm 40° IP20 930

Product code 24183

Correlated colour temperature	warm white 3000K
Luminous flux	1120lumens
Luminaire’s efficiency	80lm/W
Warranty	5 years
Brand	Karizma Luce
Output	14W
Maximum output	14W
Lens angle	40°
CRI	90
Protection class	IP20
Lifespan	50000h
Height	80.0mm
Diameter	105.0mm
Installation opening diameter	100mm
Casing colour	white / black
Casing material	aluminium
Work environment	indoor use

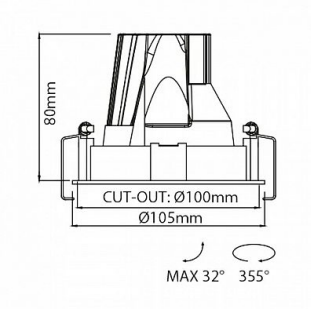

© LED House OÜ, tel: (+372) 56 202 303
Kadaka street 3/3, Tallinn 10621, Estonia, info@ledhouse.ee