KARIZMA luce

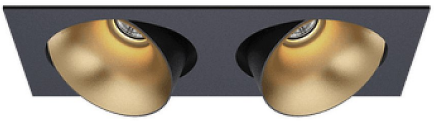

Recessed light Karizma Luce Dea Ceres S Duo black / golden 21W 1760lm 40° IP20 TRIAC 930

Product code 24213

Correlated colour temperature	warm white 3000K
Luminous flux	1760lumens
Luminaire’s efficiency	84lm/W
Warranty	5 years
Brand	Karizma Luce
Dimmable	TRIAC
Output voltage	220-240V
Output	21W
Maximum output	21W
Lens angle	40°
CRI	90
Protection class	IP20
Length	89.0mm
Width	170.0mm
Height	63.0mm
Installation opening diameter	4mm
Casing colour	black / golden
Casing material	aluminium
Work environment	indoor use
Manufacturer’s homepage	karizmaluce.com/products/dea-ceres-s-duo/

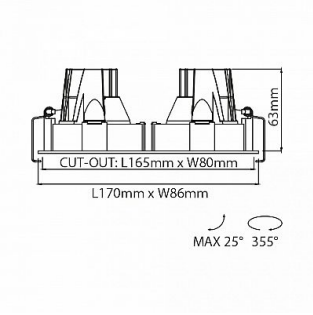

© LED House OÜ, tel: (+372) 56 202 303
Kadaka street 3/3, Tallinn 10621, Estonia, info@ledhouse.ee