

Table lamp Nova Luce Lupe gray 230V E27 IP20

Product code 24215

The Lupe table lamp combines a ceramic base with a fabric shade in a harmonious blend of gray, beige, and white tones. Designed for indoor environments, it provides ambient lighting with an E27 bulb (not included). Its surface mounting and moderate size make it ideal for tables in living rooms or bedrooms. The lamp is non-dimmable and operates with standard AC power, featuring a 135 cm cable for flexible placement. Its understated design complements modern and minimalistic interiors, delivering both style and function.

Warranty	3 years
Brand	Nova Luce
Supply voltage	230V
Socket	E27
Protection class	IP20
Height	550.0mm
Diameter	450.0mm
Weight	2.7 kg
Package weight	4.4 kg
Casing colour	gray
Casing material	ceramic
Work environment	indoor / outdoor use
Manufacturer's homepage	novaluce.com/en/products/decorative/lupe/9620179





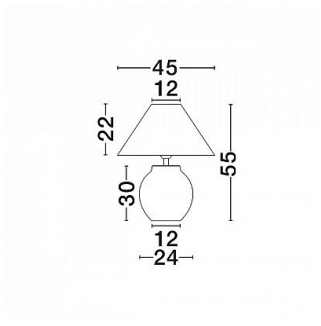



© LED House OÜ, tel: (+372) 56 202 303
Kadaka street 3/3, Tallinn 10621, Estonia, info@ledhouse.ee