

Table lamp Nova Luce Dahlia black 230V 25W 1056lm IP20 830

Product code 24216

The Dahlia suspension light features a minimalist black aluminium design with a sandy finish, ideal for indoor environments. Mounted on the floor with a surface installation, it emits warm white light (3000K) with a high CRI above 80 for natural color rendering. This LED fixture offers a luminous flux of 1056 lumens and comes with an integrated, non-replaceable LED module. Its slim profile and 180 cm cable length provide flexible placement options. Designed for ambient lighting, it is non-dimmable and suitable for spaces requiring subtle yet effective illumination.

Correlated colour temperature	warm white 3000K
Luminous flux	1056lumens
Luminaire’s efficiency	42lm/W
Warranty	3 years
Brand	Nova Luce
Supply voltage	230V
Output	25W
Maximum output	25W
CRI	80
Protection class	IP20
Length	620.0mm
Width	100.0mm
Height	3920.0mm
Weight	2.5 kg
Package weight	4.33 kg
Casing colour	black
Casing material	aluminium
Work environment	indoor use
Manufacturer’s homepage	novaluce.com/en/products/decorative/dahlia/9695502
Energy class	

© LED House OÜ, tel: (+372) 56 202 303
Kadaka street 3/3, Tallinn 10621, Estonia, info@ledhouse.ee







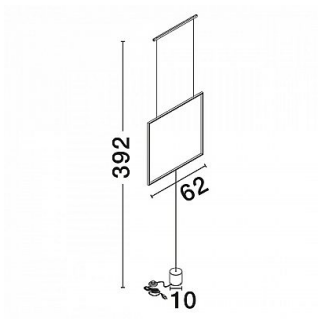

© LED House OÜ, tel: (+372) 56 202 303
Kadaka street 3/3, Tallinn 10621, Estonia, info@ledhouse.ee