

Wall light Nova Luce Egna gold / amber 230V 13W 1680lm IP20 830

Product code 24220

The Egna wall light combines opal glass with cognac and gold metal accents to create a sophisticated decorative lighting solution. Designed for indoor use, it features a warm white LED light source with a color temperature of 3000K and a high color rendering index above 80, ensuring natural and inviting illumination. This surface-mounted fixture measures 48 cm in height and is crafted from durable glass and metal materials. It includes an integrated LED module and is not dimmable or adjustable, providing consistent ambient lighting. The Egna light is ideal for enhancing living spaces with a modern, elegant touch.

Correlated colour temperature	warm white 3000K
Luminous flux	1680lumens
Luminaire’s efficiency	129lm/W
Warranty	3 years
Brand	Nova Luce
Supply voltage	230V
Output	13W
Maximum output	13W
CRI	80
Protection class	IP20
Length	120.0mm
Width	90.0mm
Height	480.0mm
Weight	1.3 kg
Package weight	1.9 kg
Casing colour	gold / amber
Casing material	metal + glass
Work environment	indoor use
Manufacturer’s homepage	novaluce.com/en/products/decorative/egna/9009282
Energy class	E (A↑G)

© LED House OÜ, tel: (+372) 56 202 303
Kadaka street 3/3, Tallinn 10621, Estonia, info@ledhouse.ee





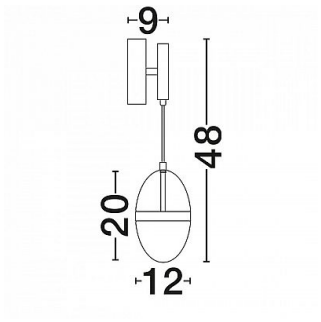



© LED House OÜ, tel: (+372) 56 202 303
Kadaka street 3/3, Tallinn 10621, Estonia, info@ledhouse.ee