

Pendant lamp Nova Luce Lava coppery CRI80 E27 IP20

Product code 24221

The Lava pendant light combines elegant copper glass with metal accents to create a sophisticated lighting solution for indoor spaces. Designed for surface mounting on ceilings, this fixture accommodates a single E27 bulb, providing focused illumination with a warm metallic finish. Its sleek, decorative form enhances modern interiors, making it ideal for living rooms, dining areas, or commercial settings. The light is non-dimmable and requires no adjustment, offering a straightforward installation and maintenance experience. With a diameter of 22 cm and height of 120 cm, it delivers a balanced presence without overwhelming the space.

Warranty	3 years
Brand	Nova Luce
Socket	E27
CRI	80
Protection class	IP20
Height	1200.0mm
Diameter	220.0mm
Weight	1.93 kg
Package weight	2.67 kg
Casing colour	coppery
Casing material	metal + glass
Manufacturer's homepage	novaluce.com/en/products/decorative/lava/9190391





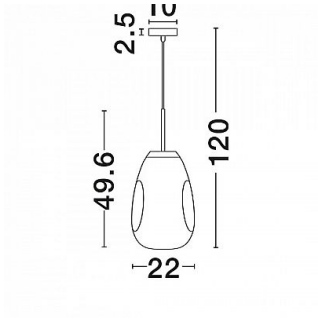



© LED House OÜ, tel: (+372) 56 202 303
Kadaka street 3/3, Tallinn 10621, Estonia, info@ledhouse.ee