

Luminaire frame OH12 black 230V GX53 IP20

Product code 24226

Supply voltage	230V
Socket	GX53
Protection class	IP20
Height	96.0mm
Diameter	85.0mm
In box	20pcs
Casing colour	black
Casing material	aluminium
Work environment	indoor use

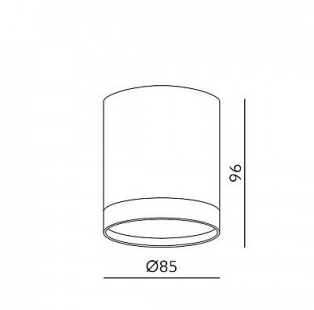

© LED House OÜ, tel: (+372) 56 202 303
Kadaka street 3/3, Tallinn 10621, Estonia, info@ledhouse.ee